CS4550
Computer Networks II: Internet Routing and Quality of Services

Geoffrey Xie

What is Computer Network?

Let's look at other information networks first

- **Legacy telephone networks**

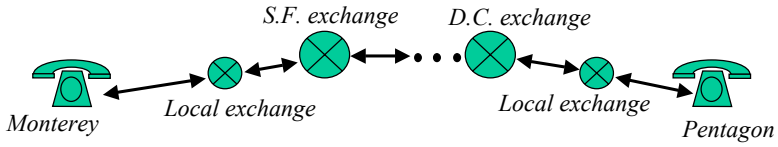

  - Analog information (electronic signals)
  - Connection setup required (dial-up)
  - Dedicated duplex channel (physical circuit)
  - Guaranteed service (real-time delivery)
  - Each network is operated by single company

Postal Network

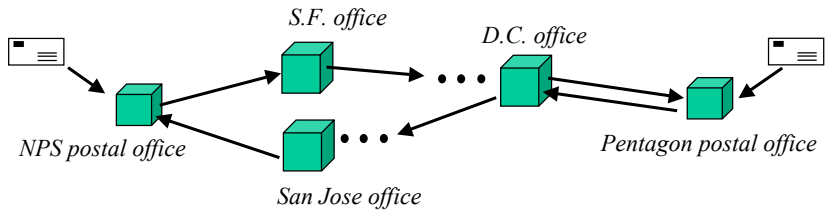

- Analog information (written/typed)
- No connection setup required (just send it)
- Simplex channel (each letter routed separately)
  - Store and forward model
- Best effort service (timely delivery of letters most of the time)

Computer Network (Current Internet)

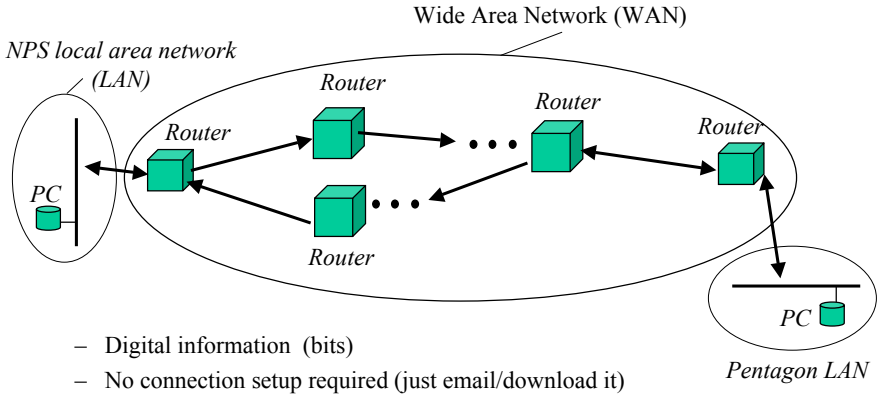

- Digital information (bits)
- No connection setup required (just email/download it)
- Simplex channel (each message routed separately)
  - Store and forward model
- Best effort service (timely delivery of messages most of the time)
- No central administration

Layered Model of Internet Architecture

- **Simplicity and scalability (modular design)**
  - Each layer provides an access interface for its immediate upper layer.
- **Extensibility (data encapsulation)**

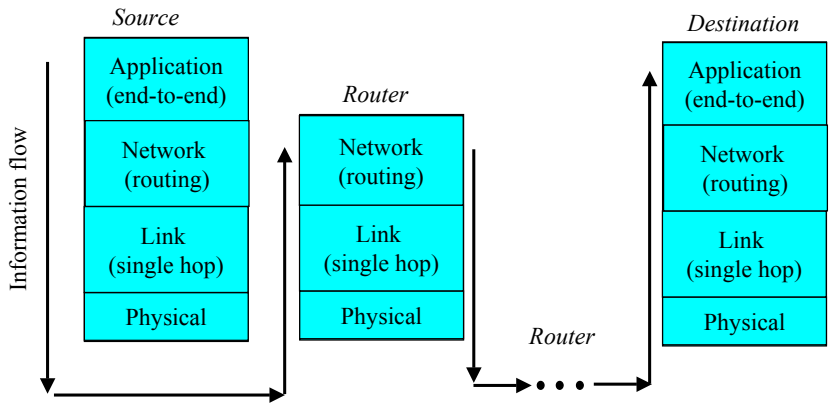

Wide Area Networks (WANs)

Data units: network layer packets

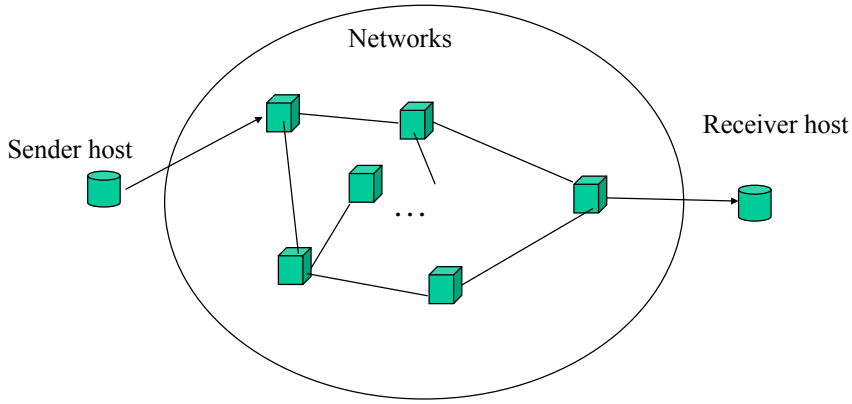

Switched Networks

- **Circuit switching (legacy telephony)**
  - set up a *dedicated* communication path (i.e., circuit) for each session
    - resources (link bandwidth, buffer, etc) are reserved
  - partition each link into constant rate logical channels
    - typically Time Division Multiplexing is used to operate such channels
- **Packet switching (current technology)**
  - transmit data in short packets
  - require no reservation of network resources
    - resources dynamically allocated to each packet
    - each packet *stored and forwarded* by a sequences of network nodes
    - much more efficient for bursty data traffic

System model of a packet switching network node

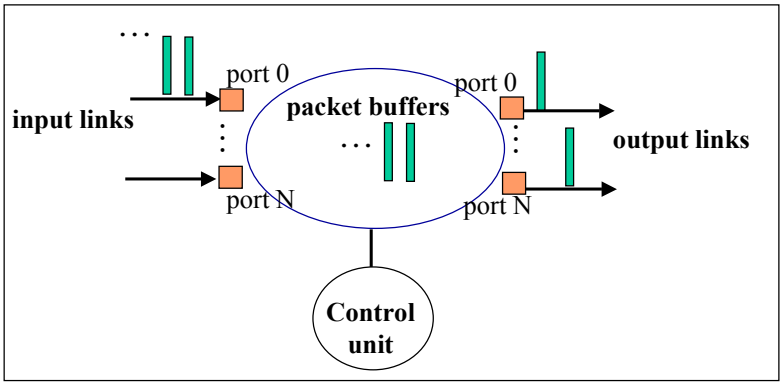

Packets queued in buffer before their turn for transmission

Routing in WAN

- **Routing —— finding a communication path from source to destination**

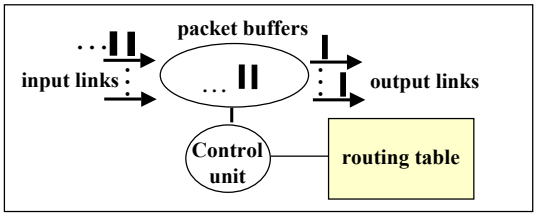

- **Must be scalable**
  - there can be millions of hosts in a WAN
- **Must be robust**
  - many things could go wrong in a WAN
  - fixed routing alone would not work

Packet Switching Networks

- **Two routing approaches**
  - connectionless (datagram)
  - connection-oriented (virtual circuit)
- **Metrics to measure performance of routing algorithms**
  - network provider/operator side
    - **network utilization** (or revenue)
  - application side
    - **average end-to-end packet delay**

      end-to-end delay = **queueing** + propagation + transmission + processing
    - **packet losses** due to buffer overflow
    - **delay jitter** for a set of packets (difference between max and min delays)

Datagram Routing

- **Connectionless**
  - each packet is treated independently by the network
  - routing table is indexed by destination address

Dest Address	Output-Port
121.5.3.0/24	1
131.120.0.0/16	2
. . . . .	. . .

  - overall system is robust
  - cannot guarantee quality of service to application
    - quality of service (QoS) may vary from one packet to another
    - packets may be out of order at the receiver
    - rely on upper layer (e.g., transport protocol) to perform error control

Virtual Circuit Routing

- **End-to-end connection is set up before data transmission**
  - all packets carry a virtual circuit number (VC #) in header
  - routing table indexed by input port # and VC # carried by packet

Determined locally and passed to upstream routers

Input Port	Incoming VC#	Output Port	Outgoing VC#
1	12	3	17
1	34	2	17
2	12	1	18
. . .	. . .	. . .	. . .

Determined by downstream routers

  - Why not assign a fixed VC # for each connection?
  - What is the maximum # of concurrent connections between N stations?

$$N \cdot (N-1)$$

Homework

- **Consider the sample network in the next slide. Act like a signaling system and fill out the routing tables for both Datagram and Virtual Circuit Routing. In Virtual Circuit Routing, assume that the five connections listed on the left side of the slide are established in turn.**

A – I: network addresses
R1 – R5: router ids
0 – 4: port numbers

R2

R1' routing table

R3

R5

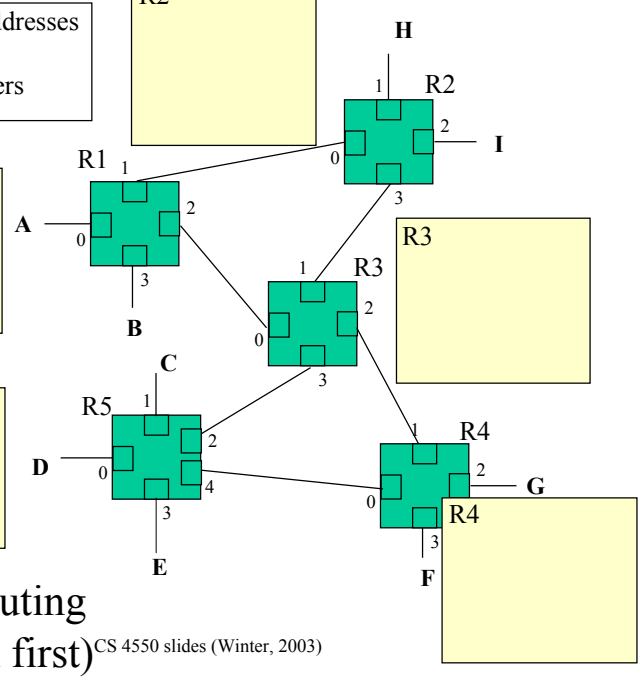

Datagram Routing
(shortest path first)

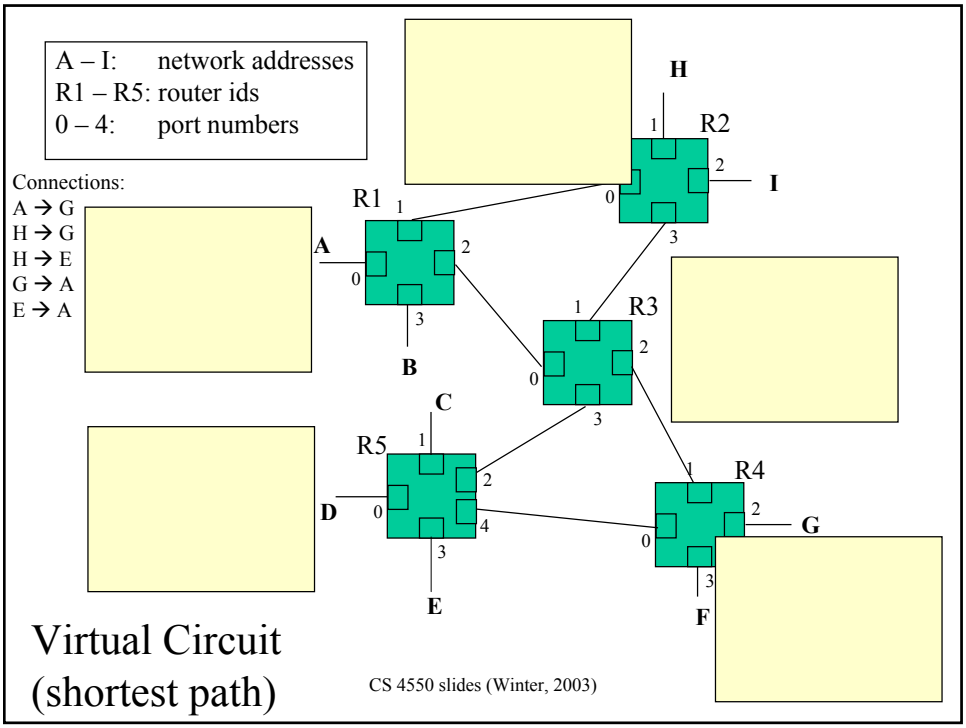

Virtual Circuit (shortest path)

Datagram vs. Virtual Circuit

- **Size of routing table for network with N destinations**
  - Datagram: N for every router, one entry for each destination
  - Virtual Circuit: close to N(N-1) in worst case
    - much smaller on average since each connection uses small num. of routers
- **When to update routing table of a node?**
  - Datagram: triggered by topological changes or load fluctuations
  - Virtual Circuit: also directly influenced by applications
    - entry added for each new connection that uses the node
      (App. makes request and connection is created when request is accepted)
    - entry deleted when the connection expires or is tore down by application

Homework

- **Assume the link between R1 and R3 in the sample network has just failed. Redo all the routing tables for both Datagram and Virtual Circuit Routing. In Virtual Circuit Routing, all five connections must be reestablished in turn.**